INSTRUCTION SHEET
#318608

Knock-Down Bun Pan Racks

ASSEMBLY INSTRUCTIONS

CAUTION

INSPECT CONTENTS IMMEDIATELY AND FILE CLAIM WITH DELIVERING CARRIER FOR ANY DAMAGE. **SAVE YOUR BOX AND ALL PACKING MATERIALS.** YOU ARE RESPONSIBLE FOR DAMAGE TO YOUR UNIT IF RETURNED IMPROPERLY PACKED.

Step 1 Choose a level area for assembly.

Step 2 Lay out parts:
- (4) 3/4″ x 1″ I-Beam Spacers
- (2) 1″ x 1-1/2″ Angle Spacers
- (8) Pieces of 1″ Channel, 1″-Long
- (2) Pre-Assembled Rack Sides
- (8) 3/8″ x 2″ Hex Bolts
- (4) 1/4″ x 1/2″ Carriage Bolts & Nuts

Step 3 Attach all bar and angle spacers to pre-assembled rack side (***Do not overtighten bolts***).

Step 4 Attach remaining pre-assembled rack side and tighten all bolts.

Step 5 Install casters last. **(End)**

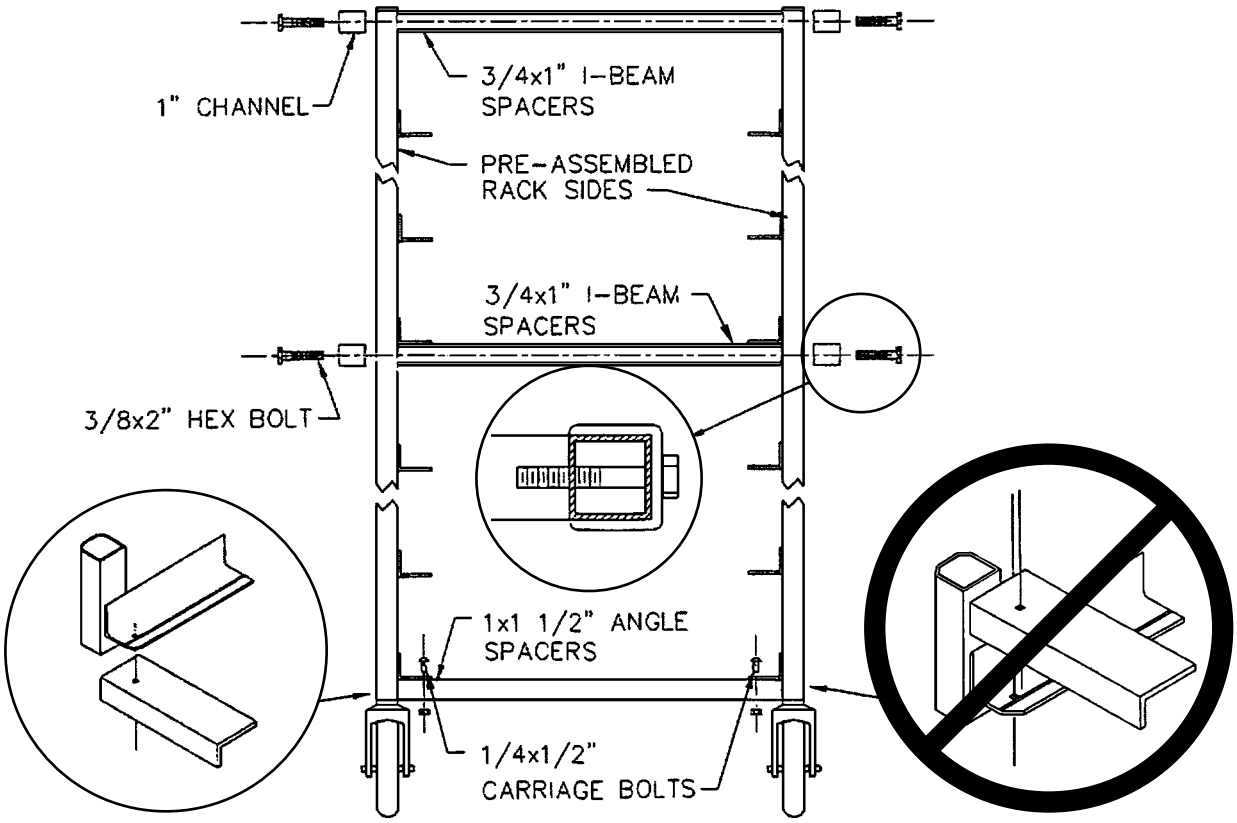

EG9870 Revised 01/24

EAGLE GROUP®
Profit from the Eagle Advantage®
• 100 Industrial Boulevard, Clayton, Delaware 19938-8903 U.S.A.
• Phone: 302/653-3000 • 800/441-8440 • Fax: 302/653-2065
• www.eaglegrp.com • www.eaglemhc.com

Eagle Foodservice Equipment, Eagle MHC, and SpecFAB® are divisions of Eagle Group. ©2024 by the Eagle Group